Quality Certification Bureau Inc.
ISO 9001:2000 Registered QMS

E238401

NOVA

TEMPERATURE CONTROLLERS

DIGITAL CONTROLLER

PROGRAMMABLE CONTROLLER

DIGITAL INDICATOR

LIMIT CONTROLLER

SAMWON TECH

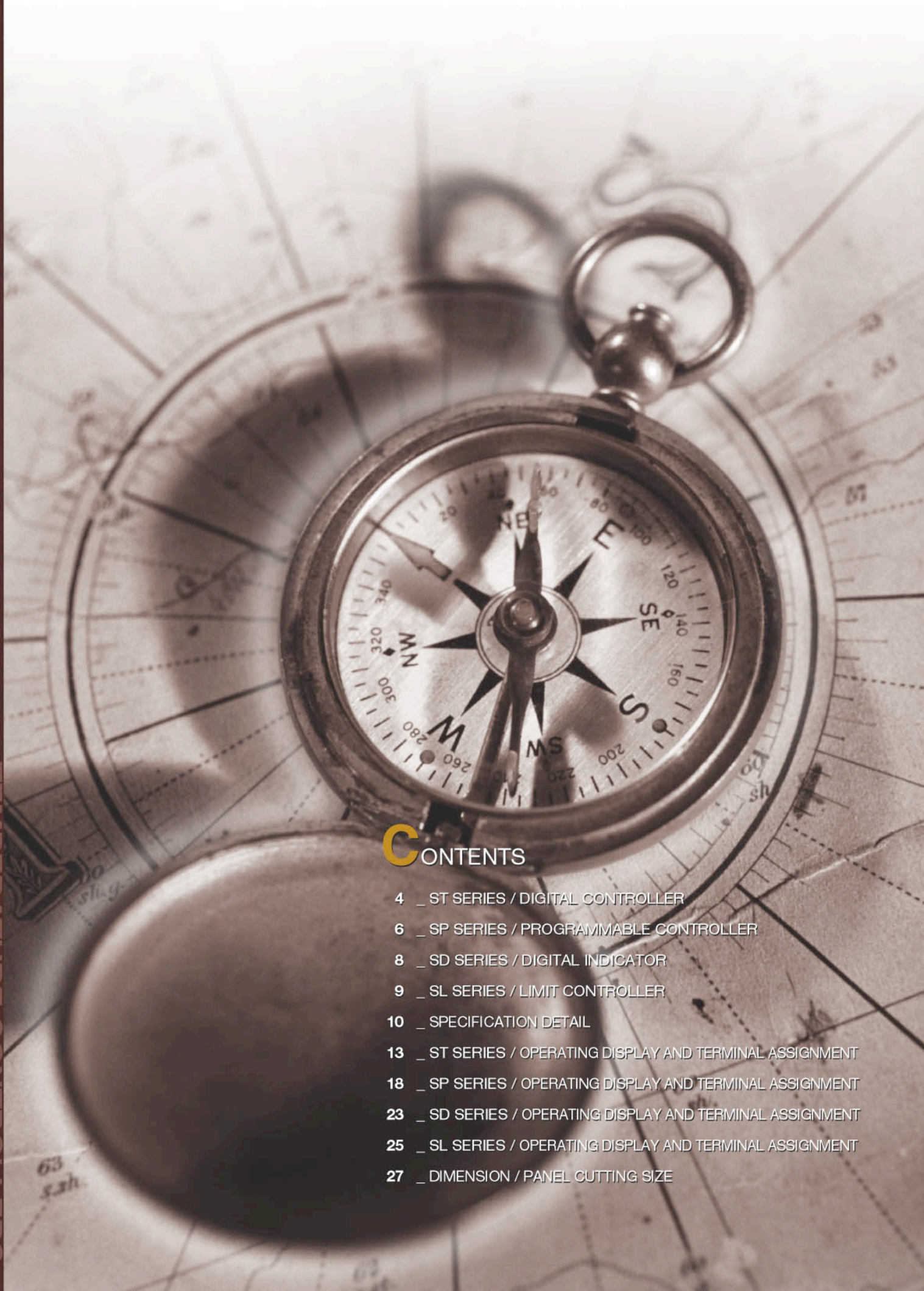

TEMPERATURE CONTROLLERS

CONTENTS

4 _ ST SERIES / DIGITAL CONTROLLER

6 _ SP SERIES / PROGRAMMABLE CONTROLLER

8 _ SD SERIES / DIGITAL INDICATOR

9 _ SL SERIES / LIMIT CONTROLLER

10 _ SPECIFICATION DETAIL

13 _ ST SERIES / OPERATING DISPLAY AND TERMINAL ASSIGNMENT

18 _ SP SERIES / OPERATING DISPLAY AND TERMINAL ASSIGNMENT

23 _ SD SERIES / OPERATING DISPLAY AND TERMINAL ASSIGNMENT

25 _ SL SERIES / OPERATING DISPLAY AND TERMINAL ASSIGNMENT

27 _ DIMENSION / PANEL CUTTING SIZE

DIGITAL CONTROLLER
PROGRAMMABLE CONTROLLER
DIGITAL INDICATOR
LIMIT CONTROLLER

NOVA

A COMPLETE RANGE OF EXCEPTIONAL CONTROLLERS

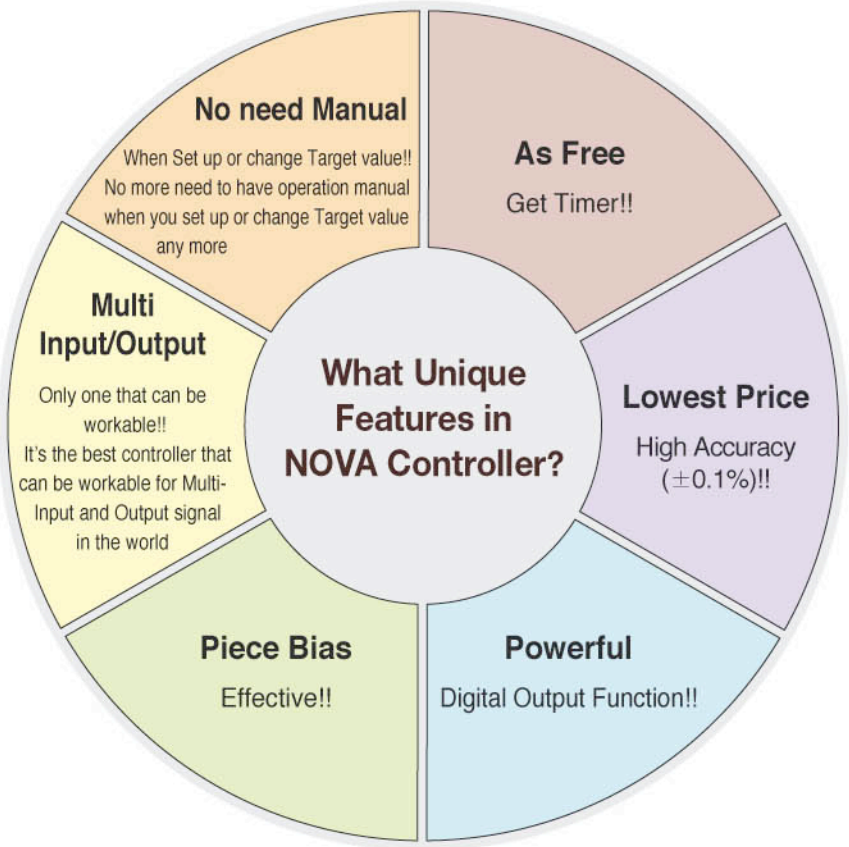

ST SERIES
DIGITAL CONTROLLER

NOVA

		ST540	ST570
Size		48(W)x48(D)x100(L)mm	72(W)x72(D)x100(L)mm
PV/SP Data Display		each 4 Digits	
Sampling Time		250ms	
Indication Accuracy		±0.1% of FS	
Control Loops and Mode		Single-Loop Control/Heating & Cooling	
Running Mode		Auto/Man, RUN/STOP (Timer or Key)	
Number of Setpoint		4 SP (3 Zones PID, 1 Zone Deviation PID)	
Sensor	PV Input	Universal Input(1 Point)	
	T/C	K, J, E, T, R, B, S, L, N, U, W, Platinel II	
	RTD	Pt100 (1/100), JPt100	
	DCV	-10 ~ 20mV, 0 ~ 100mV	
		0.4 ~ 2.0VDC, 1 ~ 5VDC, 0 ~ 10VDC (4 ~ 20mA, 0 ~ 20mA with 250Ω, 500Ω)	
Control	Control Output	Universal Output (Max 3 Points)	Universal Output (Max 5 Points)
	Time-proportional PID	Relay, SSR(V-Pulse)	
	Continuous PID	SCR (4 ~ 20mADC), (0 ~ 20mADC : Option)	
Alarm	Capacity	S'TD 2 Points	S'TD 3 Points
	Type	20 Types(High/Low Temp Limit, Deviation Limit etc)	
Retransmission Output		4 ~ 20mADC, 0 ~ 20mADC(Option) (PV, SP, MV)	
Slope setting		0 ~ 99min 59sec or 0 ~ 99hour 59min	
Digital Input	Capacity	2 Points	
	Type	SP Select, Run/Stop	
Communication Protocols		PC-Link, MODBUS(ASCII, RTU), SYNC(Master, Slave) ＊MAX : 19200bps	
Power Supply and Consumption		100 ~ 240VAC, 50 ~ 60 Hz/ Max 6W below	

Model	Suffix Code	Description	Remarks
ST540 / ST570	–□□	Digital Controller	
Type	0	Standard	
	1	Heating/Cooling	
Power	0	100V ~ 240VAC	
	1	24VDC	
Options	/RS	RS422 / RS485	*note 1
	/AOUT	Analog Output	*note 2
	/DI	2 Points	*note 1

ST540 = *note 1: RS/DI to be purchased separately
*note 2: If AOUT select, Relay2 can not be used.

ST570 = *note 1: RS/DI to be purchased separately

NOVA
TEMPERATURE CONTROLLERS

ST560	ST580	ST590
96(W)x48(D)x100(L)mm	48(W)x96(D)x100(L)mm	96(W)x96(D)x100(L)mm
each 4 Digits		
250ms		
±0.1% of FS		
Single-Loop Control/Heating & Cooling		
Auto/Man, RUN/STOP (Timer or Key)		
4 SP (3 Zones PID, 1 Zone Deviation PID)		
Universal Input(1 Point)		
K, J, E, T, R, B, S, L, N, U, W, Platinel II		
Pt100 (1/100), JPt100		
-10 ~ 20mV, 0 ~ 100mV		
0.4 ~ 2.0VDC, 1 ~ 5VDC, 0 ~ 10VDC (4 ~ 20mA, 0 ~ 20mA with 250Ω, 500Ω)		
Universal Output(Max 5 Points)		
Relay, SSR(V-Pulse)		
SCR (4 ~ 20mADC), (0 ~ 20mADC : Option)		
S'TD 3 Points		
20 Types(High/Low Temp Limit, Deviation Limit etc)		
4 ~ 20mADC, 0 ~ 20mADC(Option) (PV, SP, MV)		
0 ~ 99min 59sec or 0 ~ 99hour 59min		
2 Points		
SP Select, Run/Stop		
PC Link, MODBUS(ASCII, RTU), SYNC(Master, Slave) ∗ MAX : 19200bps		
100 ~ 240VAC, 50 ~ 60 Hz/ Max 6W below		

Model	Suffix Code	Description	Remarks
ST560 / ST580 / ST590	–□□	Digital Controller	
Type	0	Standard	
	1	Heating/Cooling	
Power	0	100V ~ 240VAC	
	1	24VDC	
Options	/RS	RS422 / RS485	*note 1
	/DI	2 Points	*note 1
	/LPS	24VDC	

ST560/580/590 = *note 1: RS/DI to be purchased separately

SP SERIES
PROGRAMMABLE CONTROLLER

NOVA

		SP540	SP570
Size		48(W)x48(D)x100(L)mm	72(W)x72(D)x100(L)mm
PV/SP Data Display		each 4 Digits	
Sampling Time		250ms	
Indication Accuracy		±0.1% of FS	
Control Loops and Mode		Single-Loop Control	
Running Mode		Prog/Reset (3 Zones PID, 1 Zone Deviation PID)	
Number of Pattern		2 Patterns	
Number of Segment		15 Segments×2 (in each Pattern : Max total 30 Segments)	
Sensor	PV Input	Universal Input(1 Point)	
	T/C	K, J, E, T, R. B, S, L, N, U, W, Platinel II	
	RTD	Pt100 (1/100), JPt100	
	DCV	-10 ~ 20mV, 0 ~ 100mV	
		0.4 ~ 2.0VDC, 1 ~ 5VDC, 0 ~ 10VDC (4 ~ 20mA, 0 ~ 20mA with 250Ω, 500Ω)	
Control	Control Output	Universal Output(Max 3 Points)	Universal Output(Max 5 Points)
	Time-proportional PID	Relay, SSR(V-Pulse)	
	Continuous PID	SCR(4 ~ 20mADC), (0 ~ 20mADC : Option)	
EVENT (Max 7 Point)	Capacity	S'TD 2 Points	S'TD 3 Points
	Type	20 Types(High/Low Temp Limit, Deviation Limit etc)	
	Inner Signal	2 Points (PV, SP, TSP)	
	Time Signal	1 Point	
	Others	1 Point (RUN, Pattern End, UP, Down, Soak)	
Retransmission Output		4 ~ 20mADC, 0 ~ 20mADC (Option) (PV, SP, MV)	
Digital Input	Capacity	2 Points	
	Type	4 Types (Run, Hold, Step, Reset)	
Communication Protocols		PC Link, MODBUS(ASCII, RTU), SYNC(Master) ＊MAX : 19200bps	
Power Supply and Consumption		100 ~ 240VAC, 50 ~ 60 Hz/ Max 6W below	

Model	Suffix Code	Description			
SP540 / SP570	– □ □	Programmable Controller			
Type	0	Standard			
Power	0	100V ~ 240VAC			
	1	24VDC			
Options	/RS	RS422 / RS485	*note 2	RS422 / RS485	*note 1
	/AOUT	Analog Output	*note 1	Analog Output	
	/DI	2 Points	*note 2, 3	2 Points	*note 1, 2
	/DO2	2 Points	*note 1, 3	2 Points	*note 2
	/DO4	4 Points	Nomination	4 Points	Nomination

※SP540 = *note 1: AOUT/Do2/Relay2 to be purchased separately
*note 2: RS/DI to be purchased separately
*note 3: DO2/DI to be purchased separately

※SP570 = *note 1: RS/DI to be purchased separately
*note 2: DO2/DI to be purchased separately

NOVA
TEMPERATURE CONTROLLERS

SP580	SP590	SP790
48(W)x96(D)x100(L)mm	96(W)x96(D)x100(L)mm	96(W)x96(D)x100(L)mm
each 4 Digits		each LCD 5 Digits
250ms		
±0.1% of FS		
Single-Loop Control		
Prog/Reset, 3 Zones PID, 1 Zone Deviation PID		Program, Fix, On/Off, Heating/Cooling, Auto/Man
2 Patterns		30 Patterns / Available to Link between Patterns
15 Segments×2 (in each Pattern : Max total 30 Segments)		100 segments X30, Max 300 segments
Universal Input(1 Point)		
K, J, E, T, R. B, S, L, N, U, W, Platinel II		
Pt100 (1/100), JPt100		Pt100 (1/100), JPt100(1/100)
-10 ~ 20mV, 0 ~ 100mV		
0.4 ~ 2.0VDC, 1 ~ 5VDC, 0 ~ 10VDC		
Universal Output(Max 5 Points)		SSR 2 Points, SCR 2 Points(Total 4 Points) PLY 1Point
Relay, SSR(V-Pulse)		
SCR(4 ~ 20mADC), (0 ~ 20mADC : Option)		SCR(4 ~ 20mADC), (0 ~ 20mADC)
S'TD 3 Points		S'TD 4 Points
20 Types(High/Low Temp Limit, Deviation Limit etc)		
2 Points (PV, SP, TSP)		4 Points (PV, SP, TSP)
1 Point		5 Points (0 ~ 99min. 59sec. / 0 ~ 99hours. 59min.)
1 Point (RUN, Pattern End, UP, Down, Soak)		6 Points (RUN, ERROR, UP, SOAK, DOWN, Pattern END)
4 ~ 20mADC, 0 ~ 20mADC (Option) (PV, SP, MV)		4 ~ 20mADC, 0 ~ 20mADC (PV, SP, MV, HMV, CMV)
2 Points		RUN/STOP, SP Select, ERROR Select, Pattern Select, HOLD, STEP
4 Types (Run, Hold, Step, Reset)		
PC Link, MODBUS(ASCII, RTU), SYNC(Master) ＊MAX : 19200bps		
100 ~ 240VAC, 50 ~ 60 Hz/ Max 6W below		

Model	Suffix Code	Description	Remarks	Model	Suffix Code	Description
SP580 / SP590	- □ □	Programmable Controller		SP790	- □ □	
Type	0	Standard		Type	0	Standard
	1	-			1	Heating / Cooling
Power	0	100~240VAC		Communication protocols	0	-
	1	24VDC	*note 1		1	RS422 / RS485
Options	/RS	RS422 / RS485			Standard	DI 4 Points
	/DI	DI 2 Points				Relay 8 Points
	/DO	DO 4 Points				Open Collector 4 Points
	/LPS	24VDC				

※SP580/590 = *note 1: RS/DI to be purchased separately

SD SERIES
DIGITAL INDICATOR

NOVA

		SD560	SD590
Size		96(W)x48(D)x100(L)mm	96(W)x96(D)x100(L)mm
PV/SP Data Display		each 4 Digits	
Sampling Time		250ms	
Indication Accuracy		±0.1% of FS	
Sensor	PV Input	Universal Input(1 Point)	
	T/C	K, J, E, T, R, B, S, L, N, U, W, Platinel II	
	RTD	Pt100 (1/100), JPt100	
	DCV	-10 ~ 20mV, 0 ~ 100mV	
		0.4 ~ 2.0VDC, 1 ~ 5VDC, 0 ~ 10VDC (4 ~ 20mA, 0 ~ 20mA with 250Ω, 500Ω)	
Alarm	Capacity	S'TD 3 Points	
	Type	8 Types(High/Low Temp Limit, Waitly High/Low Temp Limit)	
Retransmission Output		4 ~ 20ADC, 0 ~ 20mA(Option) (PV)	
Digital Input	Capacity	2 Points	
	Type	2 Types (PV Min/Max, Reset Min/Max)	
Communication Protocols		PC Link, MODBUS(ASCII, RTU) ※MAX : 19200bps	
Power Supply and Consumption		100 ~ 240VAC, 50 ~ 60 Hz/ Max 6W below	

Model	Suffix Code	Description	
SD560 / SD590	–□□	Digital Indicator	
Type	0	Standard	
Power	0	100V ~ 240VAC	
	1	24VDC	
Options	/RS	RS422/RS485	*note 1
	/DI	2 Points	*note 1
	/LPS	24VDC	

※SD560/590 = *note 1: RS/DI to be purchased separately

SL SERIES
LIMIT CONTROLLER

NOVA

		SL540	SL590
Size		48(W)x48(D)x100(L)mm	96(W)x96(D)x100(L)mm
PV/SP Data Display		each 4 Digits	
Sempling Time		250ms	
Indication Accuracy		±0.1% of FS	
Control Mode		High or Low	
Sensor	PV Input	Universal Input(1 Point)	
	T/C	K, J, E, T, R, B, S, L, N, U, W, Platinel II	
	RTD	Pt100 (1/100), JPt100 (1/100)	
	DCV	-10 ~ 20mV, 0 ~ 100mV	
		0.4 ~ 2.0VDC, 1 ~ 5VDC, 0 ~ 10VDC	
Alarm	Capacity	S'TD 2 Point	
	Type	20 Types (High/Low Temp Limit, Deviation Limit etc)	
Retransmission Output		4 ~ 20mADC, 0 ~ 20mADC (PV, SP)	
Digital Input	Capacity	–	
	Type	–	
Communication Protocols		PC Link, MODBUS(ASCII, RTU) ⁎ MAX : 19200bps	
Power Supply and Consumption		100 ~ 240VAC, 50 ~ 60 Hz/ Max 6W below	

Model	Suffix Code	Description
SL540 / SL590	– □□	Limit Controller
Type	0	Standard
Power	0	100V ~ 240VAC
	1	24VDC
Options	/RS	RS422/RS485

What's Unique Features in Nova Series Controller

1 Available for Multi and Simultaneous Output(Max 5 Points)

- Simultaneous and Multi Output available : Relay, SSR(V-Pulse), SCR(4 ~ 20mADC, 0 ~ 20mADC : Option)
- Maximum 5 Heaters can be controlled by using just 1 controller

SERIES		TYPE	CONTROL OUTPUT			SUB Relay OUTPUT		DO OUTPUT
			1	2	3	1	2	DO1~DO4
SP series	ST series	CONTROL OUTPUT(HEAT)	●	●	●	●	●	
		CONTROL OUTPUT(COOL)	●	●	●	●	●	
		ALARM1	●			●	●	●
		ALARM2	●			●	●	●
		ALARM3	●			●	●	●
		RUN	●			●	●	●
		RETRANSMISSION		●	●			
		INNER SIGNAL OUT1	●			●	●	●
		INNER SIGNAL OUT2	●			●	●	●
		TIME SIGNAL OUT	●			●	●	●
		PT END	●			●	●	●
		UP, DOWN, SOAK, RUN						●

* SP790 is DO 12 Points (Relay 8 Points, O.C. 4 Points) STD : IS 4 Points, TS 5 Points, ALARM 4 Points → See the Manual for

2 Easy and set up parameter in LED Display

- Easy change and setup parameter followed by display name in LED
- SP790 is LCD(128×64 DOT) Display

3 Built-In Reserve function of RUN and STOP (Timer and Key)

- Reserve Function of Run is to start control temperature after setting time
- Reserve Function of End is to stop control output when after pass the setting time
- SP790 has a built-in Reserve Function - See the manual for Details.

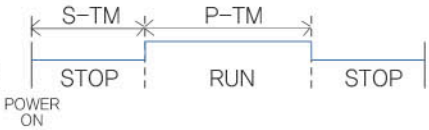

4 Input Piece Bias Function (Max 4 Zones)

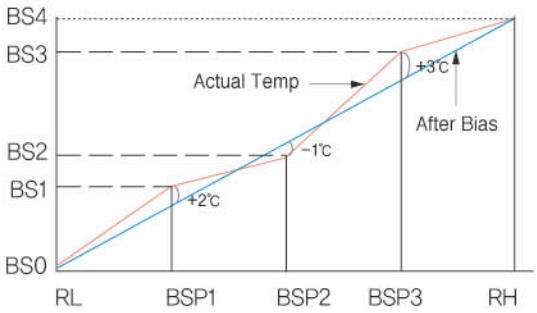

The actual temperature of machine in range of 0℃ ~ 100 ℃ and in case of doing Piece Bias on +2℃ in 25℃, -1℃ in 50℃, +3℃ in 75℃, each parameters are shown as under
(RL=0℃, BSP1=25℃, BSP2=50℃, BSP3=75℃, RH=100℃)
BSO=0℃, BS1=-2℃, BS2=+1℃, BS3=-3℃, BS4=0℃

BSP1, BSP2, BSP3 : Setting Temperature for Bias range
BS1, BS2, BS3 : Bias Value for Temperature

- SP790 is MAX 10 Zones.

5 Setting up Gain Automatically by Auto-Tuning (AT Gain)

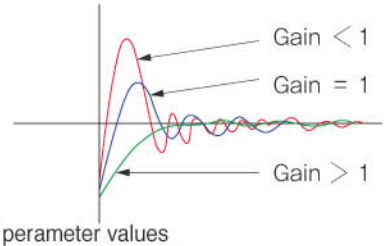

- It is setting up when PID parameter is obtaining by Auto Tuning.
- To get rapid sampling time is to reduce the value of Gain.
- To stabilize control value is to increase the value of Gain.
  However, It will be having more violent of Hunting under lower leveled Gain.
- Auto-Tuning is the function in the controller itself automatically obtains and sets PID perameter values

6 Limit Controller for checking over temperature

- For the purpose of checking over temperature, it is followed by international standard.
- When over temperature occure, the power of Heater and machine is cut.
  If the temperature will be return the setting range, the controller is keeping the power off and will be power on after confirmation button push for resetting.
- 2 mode in high temperature limit and low temperature limit
- Display and memory function for high temperature and low temperature
- Display function of time period from the power off to the reset

7 Reference Universal Input

Input		Temperature Range (℃)	Temperature Range (℉)	Indicating Accuracy
Thermocouple	K1	−200~1370	−300~2500	Temp Range ≥ 0℃ : ±0.1%±1digit Temp Range < 0℃ : ±0.2%±1digit
	K2	−199.9~999.9	0~2300	
	J	−199.9~999.9	−300~2300	
	T	−199.9~400.0	−300~750	
	B	0~1800	32~3300	Temp Range ≥ 400℃ : ±0.15%±1digit Temp Range < 400℃ : ±5%±1digit
	R	0~1700	32~3100	All Temp. Range ±0.15%±1digit
	S	0~1700	32~3100	
	E	−199.9~999.9	−300~1800	Temp Range ≥ 0℃ : ±0.1%±1digit Temp Range < 0℃ : ±0.2%±1digit
	L	−199.9~900.0	−300~1300	
	U	−199.9~400.0	−300~750	
	N	-200~1300	-300~2400	All Temp. Range ±0.2%±1digit Temp Range < 0℃ : ±0.25%±1digit
	W	0~2300	32~4200	All Temp. Range ±0.2%±1digit
	Platinel II	0~1390	32~2500	All Temp. Range ±0.1%±1digit
RTD	PtA	−199.9~850.0	−300~1560	All Temp. Range ±0.1%±1digit
	PtB	−199.9~500.0	−199.9~999.9	
	PtC	−199.9~99.99	−4.0~212.0	All Temp. Range ±0.2%±1digit
	JPtA	−150.0~500.0	−199.9~999.9	All Temp. Range ±0.1%±1digit
	JPtB	−150.0~150.0	−199.9~300.0	
DC Voltage	0.4~2.0V	0.400~2.000V		All Temp. Range ±0.1%±1digit Scaling Range : -1999 ~ 9999
	1~5V	1~5V		
	0~10V	0~10V		
	-10~20㎷	-10~20V		
	0~100㎷	0~100V		

- SP790 : Ptc, JPtB(−50.00 ~ 150.00)
- Fuction at Standard Operation Situation [23±2℃, 55±10%RH, 50/60㎐]

※When it receive 4 ~ 20mADC, Choose 1 ~ 5VDC and connect 250Ω resistance.

8 Control Mode

Type of Control Mode	Description
Continuous PID	Output Current : 4 ~ 20mA(below 600Ω in road resistance), 0 ~ 20mADC(Option) Output Accuracy : ±0.3% of SPAN
Time-propotional PID Voltage Pulse Output	Voltage in 'On' : 15VDC(over 600Ω in road resistance, limit current of 30mA when it is open) Voltage in 'Off' : below 0.1VDC Cycle Time : 1 ~ 300 sec selectable
Time-propotional PID Relay Output	Contact Rating : 250VAC 3A, 30VDC 3A(road resistance) Cycle Time : 1 ~ 300 sec selectable

9 Alarm Display

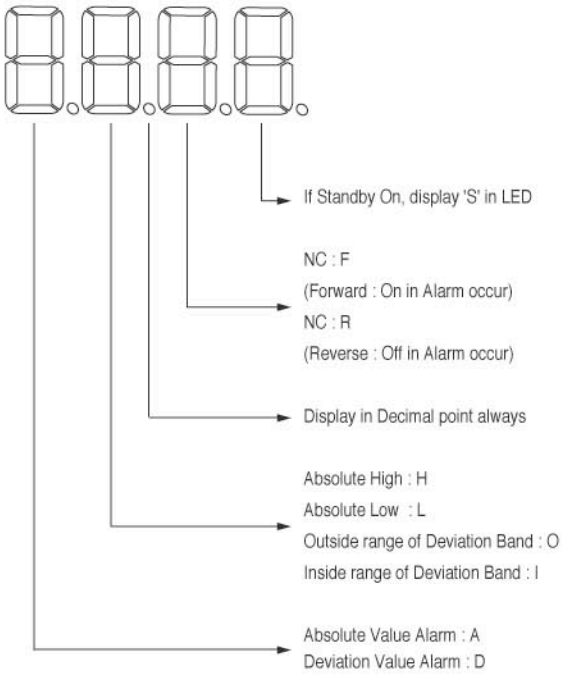

No.	Type	Display Form
1	Absolute-Value Upper-Limit Alarm(Forward)	AH.F
2	Absolute-Value Lower-Limit Alarm(Forward)	AL.F
3	Upper-Limit Alarm of Deviation(Forward)	DH.F
4	Lower-Limit Alarm of Deviation(Forward)	DL.F
5	Upper-Limit Alarm of Deviation(Reverse)	DH.R
6	Lower-Limit Alarm of Deviation(Reverse)	DL.R
7	Upper-and-Lower-Limit Alarm of Deviation(Forward)	DO.F
8	Upper-and-Lower-Limit Range Alarm of Deviation(Forward)	DI.F
9	Absolute-Value Upper Limit Alarm(Reverse)	AH.R
10	Absolute-Value Lower Limit Alarm(Reverse)	AL.R
11	Absolute-Value Upper-Limit Alarm with Standby(Forward)	AH.FS
12	Absolute-Value Lower-Limit Alarm with Standby(Forward)	AL.FS
13	Upper-Limit Alarm of Deviation with Standby(Forward)	DH.FS
14	Lower-Limit Alarm of Deviation with Standby(Forward)	DL.FS
15	Lower-Limit Alarm of Deviation with Standby(Reverse)	DH.RS
16	Upper-Limit Alarm of Deviation with Standby(Reverse)	DL.RS
17	Upper-and-Lower-Limit Alarm of Deviation with Standby(Forward)	DO.FS
18	Upper-and-Lower-Limit Range Alarm of Deviation with Standby(Forward)	DI.FS
19	Absolute-Value Upper-Limit Alarm with Standby(Reverse)	AH.RS
20	Absolute-Value Lower-Limit Alarm with Standby(Reverse)	AL.RS

NOVA
ST SERIES
ST540

Digital controller ST540

- Easy Change and Setting up Parameter, followed by display name in LED
- Available function to protect Over-Shot (Fuzzy)
- 2 Points Alarm output as Standard
- Function of RUN/STOP
- Reserve function of RUN/END (Timer or Key)
- Display of Running status in Auxilary Output
- Input Piece Bias Function (Max 4 zones)
- Heating and Cooling Control
- Automatic PID Paramater Calculation (AT Gain)
- Variety of communication Protocols
- Reliable quality (CE, CUL, ISO, IP65 applied)

Special Features

- A/D Convert : 18bit
- High Accuracy (±0.1%) with excellent Function
- Multi Input : TC, RTD, DCV
- Simultaneous and Multi output available in Max 3 Points

Operating Display

▶ Display of the status in Stop running

▶ Display of the value of PV and Control Output

▶ Select SP No

▶ Set Alarm value

User can set the value

Terminal Assignment

: Options

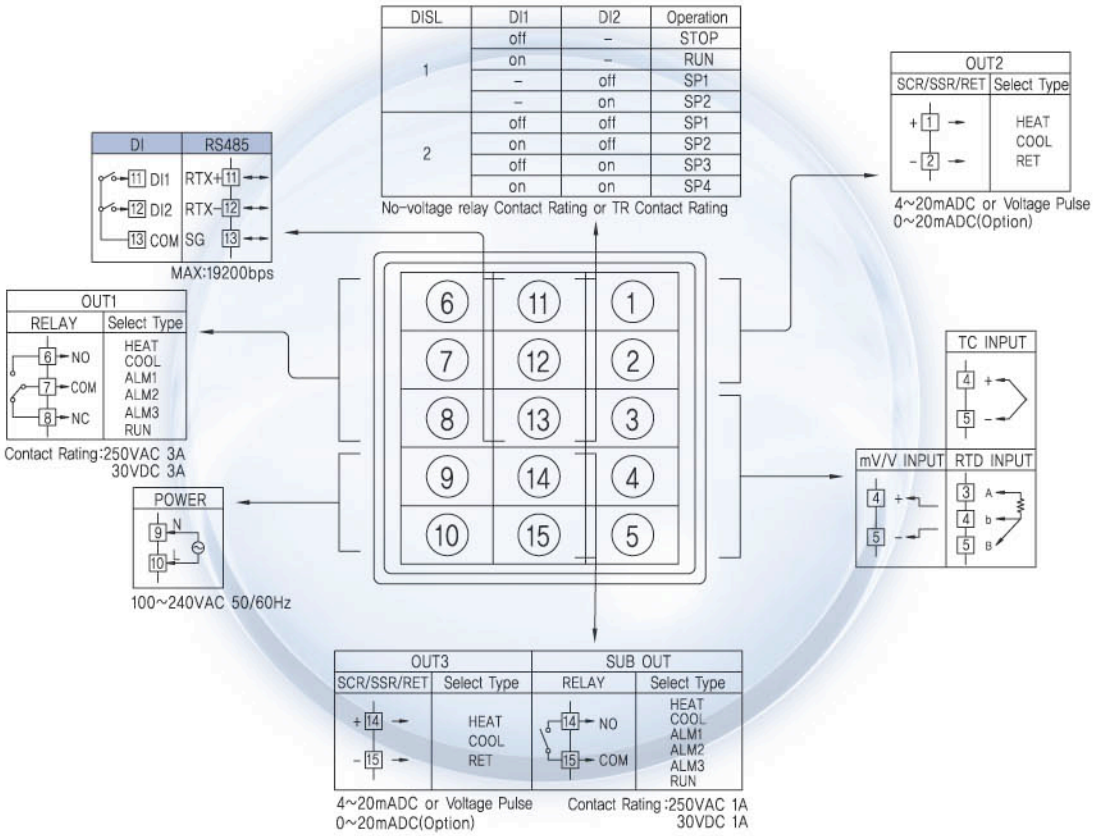

NOVA
ST SERIES
ST570

Digital controller ST570

- Easy Change and Setting up Parameter, followed by display name in LED
- Available function to protect Over-Shot (Fuzzy)
- 1 Point Alarm output as Standard Option
- Function of RUN/STOP
- Reserve function of RUN/END (Timer or Key)
- Display of Running status in Auxilary Output
- Input Piece Bias Function (Max 4 zones)
- Heating and Cooling Control
- Automatic PID Paramater Calculation (AT Gain)
- Variety of communication Protocols
- Reliable quality (CE, CUL, ISO, IP55 applied)

Special Features

- A/D Convert : 18bit
- High Accuracy (±0.1%) with excellent Function
- Multi Input : TC, RTD, DCV
- Simultaneous and Multi output available in Max 5 Points

Operating Display

▶ Display of the status in Stop running

▶ Display of the value of PV and Control Output

▶ Select SP No

▶ Set Alarm value

User can set the value

Terminal Assignment

: Options

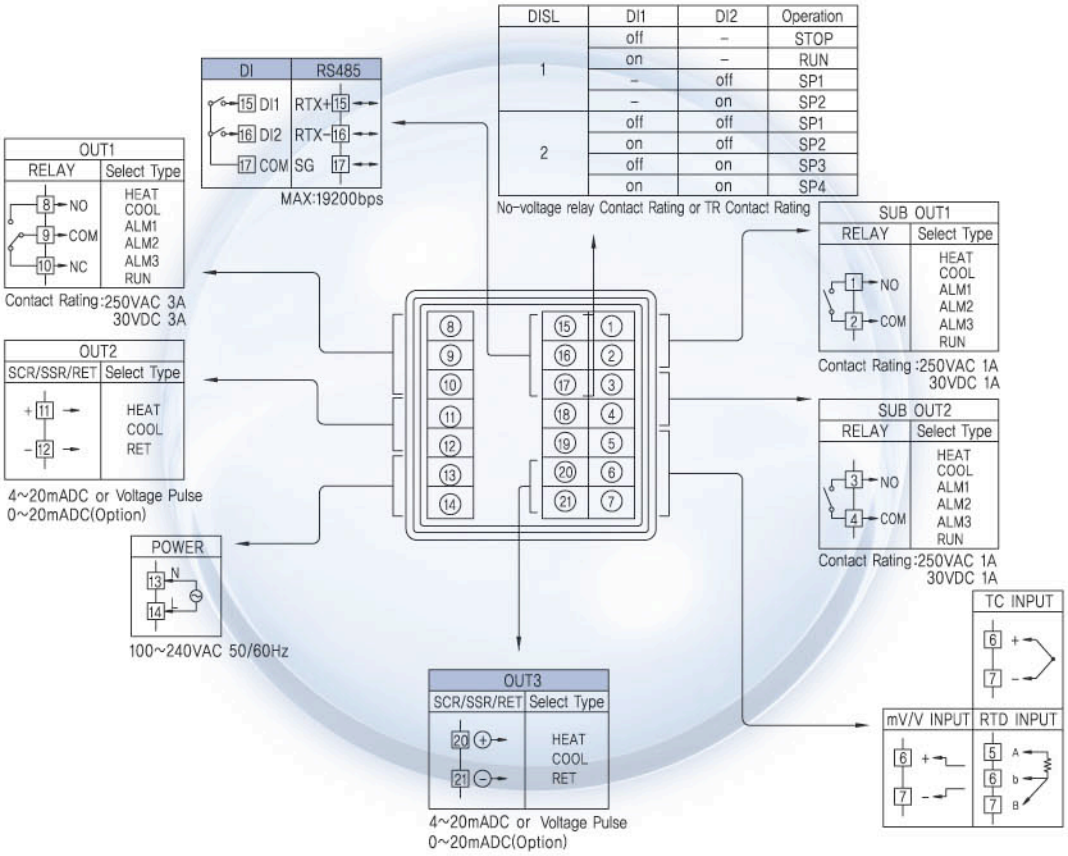

DISL	DI1	DI2	Operation
1	off	–	STOP
	on	–	RUN
	–	off	SP1
	–	on	SP2
2	off	off	SP1
	on	off	SP2
	off	on	SP3
	on	on	SP4

No-voltage relay Contact Rating or TR Contact Rating

NOVA
ST SERIES
ST560

Digital controller ST560

- Easy Change and Setting up Parameter, followed by display name in LED
- Available function to protect Over-Shoot (Fuzzy)
- 1 Point Alarm output as Standard Option
- Function of RUN/STOP
- Reserve function of RUN/END (Timer or Key)
- Display of Running status in Auxiliary Output
- Input Piece Bias Function (Max 4 zones)
- Heating and Cooling Control
- Automatic PID Paramater Calculation (AT Gain)
- Variety of communication Protocols
- Reliable quality (CE, CUL, ISO, IP65 applied)

Special Features

- A/D Convert : 18bit
- High Accuracy (±0.1%) with excellent Function
- Multi Input : TC, RTD, DCV
- Simultaneous and Multi output available in Max 5 Points

Operating Display

▶ Display of the status in Stop running

▶ Display of the value of PV and Control Output

▶ Select SP No

▶ Set Alarm value

User can set the value

Terminal Assignment

: Options

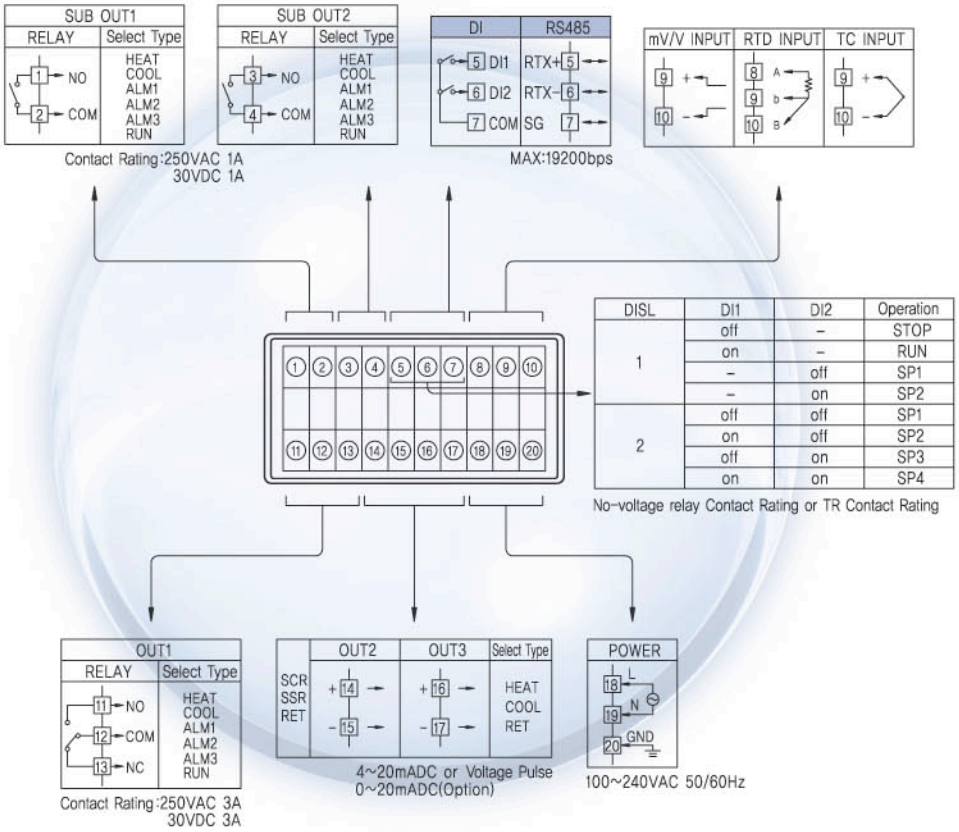

NOVA
ST SERIES
ST580

Digital controller ST580

- Easy Change and Setting up Parameter, followed by display name in LED
- Available function to protect Over-Shoot (Fuzzy)
- 1 Point Alarm output as Standard Option
- Function of RUN/STOP
- Reserve function of RUN/END (Timer or Key)
- Display of Running status in Auxiliary Output
- Input Piece Bias Function (Max 4 zones)
- Heating and Cooling Control
- Automatic PID Paramater Calculation (AT Gain)
- Variety of communication Protocols
- Reliable quality (CE, CUL, ISO, IP65 applied)

Special Features

- A/D Convert : 18bit
- High Accuracy (±0.1%) with excellent Function
- Multi Input : TC, RTD, DCV
- Simultaneous and Multi output available in Max 5 Points

Operating Display

▶ Display of the status in Stop running

▶ Display of the value of PV and Control Output

▶ Select SP No

▶ Set Alarm value

User can set the value

Terminal Assignment

: Options

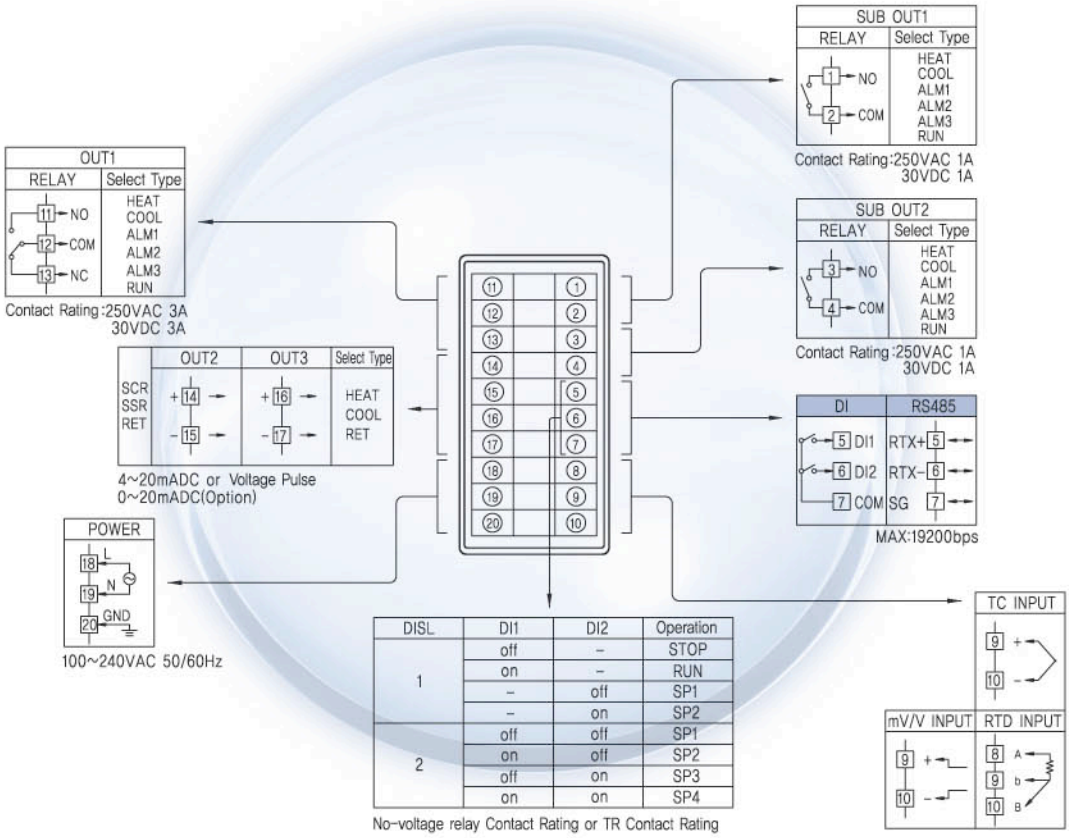

DISL	DI1	DI2	Operation
1	off	–	STOP
	on	–	RUN
	–	off	SP1
	–	on	SP2
2	off	off	SP1
	on	off	SP2
	off	on	SP3
	on	on	SP4

No-voltage relay Contact Rating or TR Contact Rating

NOVA
ST SERIES
ST590

Digital controller ST590

- Easy Change and Setting up Parameter, followed by display name in LED
- Available function to protect Over-Shoot (Fuzzy)
- 1 Point Alarm output as Standard Option
- Function of RUN/STOP
- Reserve function of RUN/END (Timer or Key)
- Display of Running status in Auxiliary Output
- Input Piece Bias Function (Max 4 zones)
- Heating and Cooling Control
- Automatic PID Paramater Calculation (AT Gain)
- Variety of communication Protocols
- Reliable quality (CE, CUL, ISO, IP55 applied)

Special Features

- A/D Convert : 18bit
- High Accuracy (±0.1%) with excellent Function
- Multi Input : TC, RTD, DCV
- Simultaneous and Multi output available in Max 5 Points

Operating Display

▶ Display of the status in Stop running

▶ Display of the value of PV and Control Output

▶ Select SP No

▶ Set Alarm value

User can set the value

Terminal Assignment

: Options

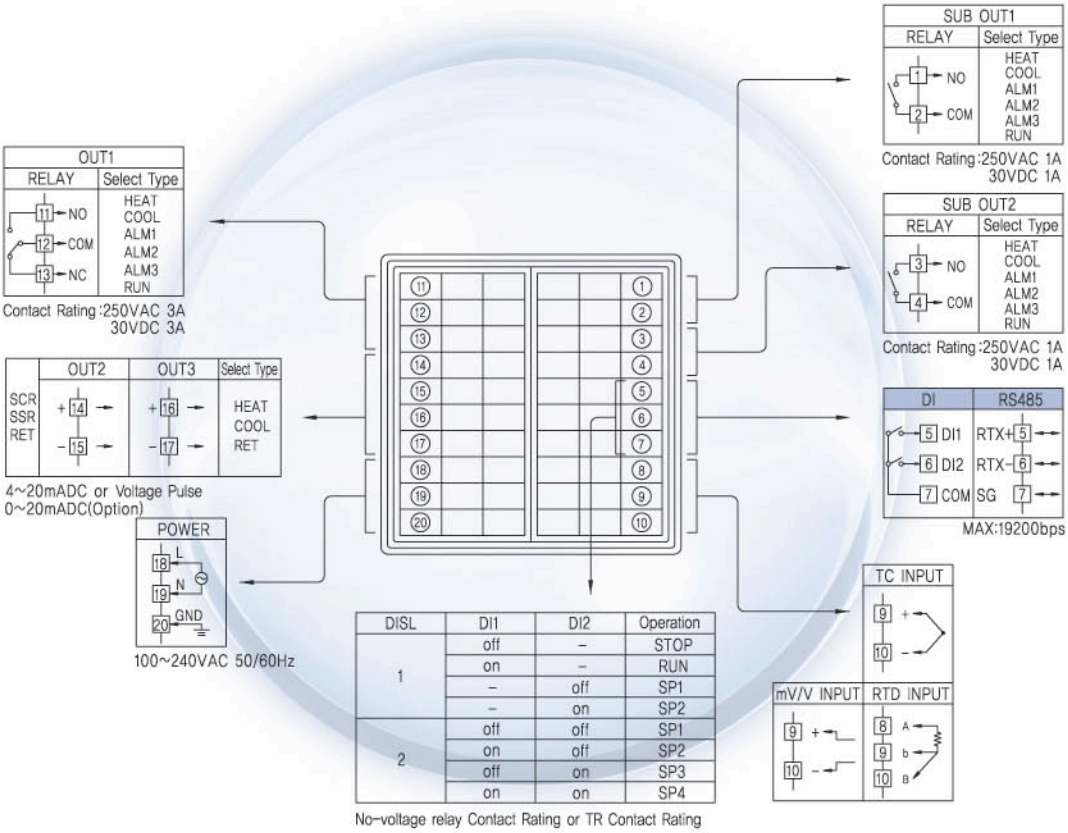

DISL	DI1	DI2	Operation
1	off	–	STOP
	on	–	RUN
	–	off	SP1
	–	on	SP2
2	off	off	SP1
	on	off	SP2
	off	on	SP3
	on	on	SP4

No-voltage relay Contact Rating or TR Contact Rating

NOVA
SP SERIES
SP540

Programmable controller SP540

- Rretransmission Output, 1Alarm Output
- RUN/STOP Function in the external Input contact point
- Display of Running status in Auxiliary Output
- Large Program Capacity : 2 Patterns / 30 Segments
- Variety of Auxiliary Output available (ex IS, TS, PEND etc)
- Input Piece Bias Function (Max 4 zones)
- Automatic PID Parameter Calculation(AT Gain)
- Variety of communication Protocols
- Reliable quality (CE, CUL, ISO, IP65 applied)

Special Features

- A/D Convert : 18bit
- High Accuracy (±0.1%) with excellent Function
- Multi Input : TC, RTD, DCV
- Simultaneous and Multi output available in Max 3 Points
- Easy parameter and program pattern setting
- Function to protect Over-Shoot (Fuzzy)

Operating Display

▶ Display of the status in Stop running

▶ Display of the value of PV and Control Output

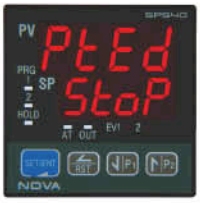

▶ Display of Stop Program Run

▶ Current Run Seg shift for Next Seg : "STEP=ON"

▶ Program Run is to Hold "HOLD=ON"

Terminal Assignment

: Options

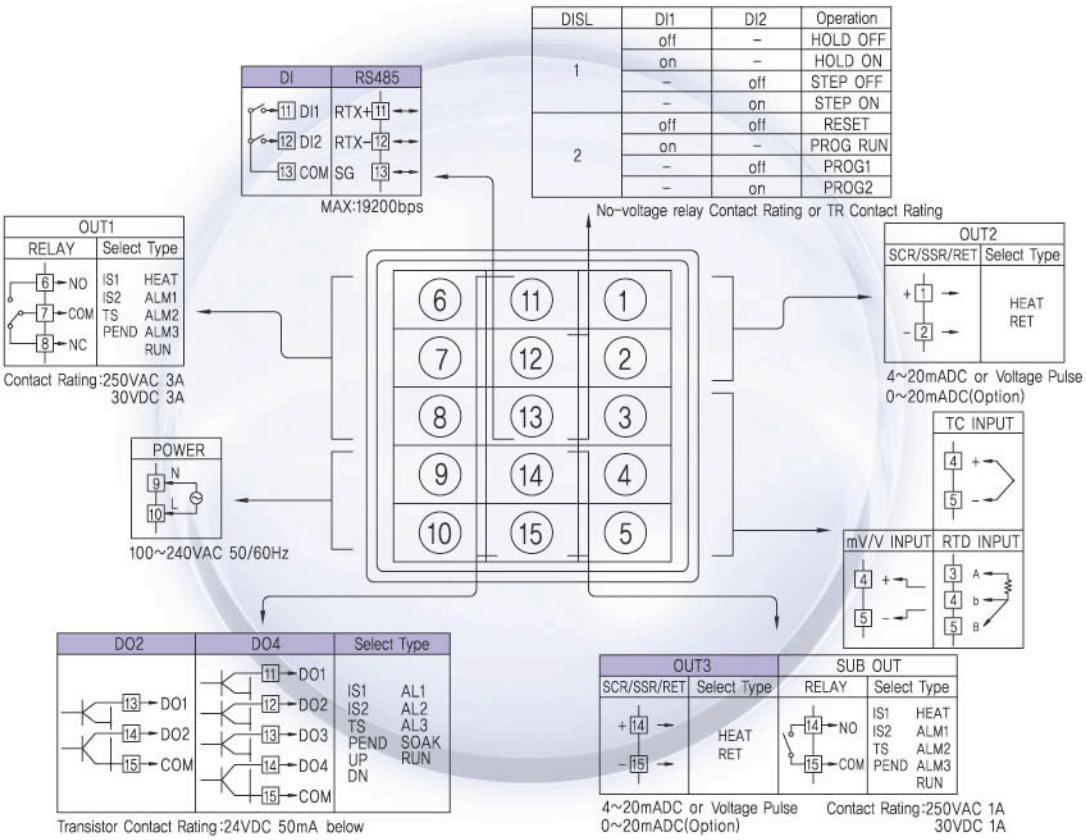

NOVA
SP SERIES
SP570

Programmable controller SP570

- Rretransmission Output, 1Alarm Output
- RUN/STOP Function in the external Input contact point
- Display of Running status in Auxiliary Output
- Large Program Capacity : 2 Patterns / 30 Segments
- Variety of Auxiliary Output available (ex IS, TS, PEND etc)
- Input Piece Bias Function (Max 4 zones)
- Automatic PID Parameter Calculation(AT Gain)
- Variety of communication Protocols
- Reliable quality (CE, CUL, ISO, IP55 applied)

Special Features

- A/D Convert : 18bit
- High Accuracy (±0.1%) with excellent Function
- Multi Input : TC, RTD, DCV
- Simultaneous and Multi output available in Max 5 Points
- Easy parameter and program pattern setting
- Function to protect Over-Shoot (Fuzzy)

Operating Display

▶ Display of the status in Stop running

▶ Display of the value of PV and Control Output

▶ Display of Stop Program Run

▶ Current Run Seg shift for Next Seg "STEP=ON"

▶ Program Run is to Hold "HOLD=ON"

Terminal Assignment

: Options

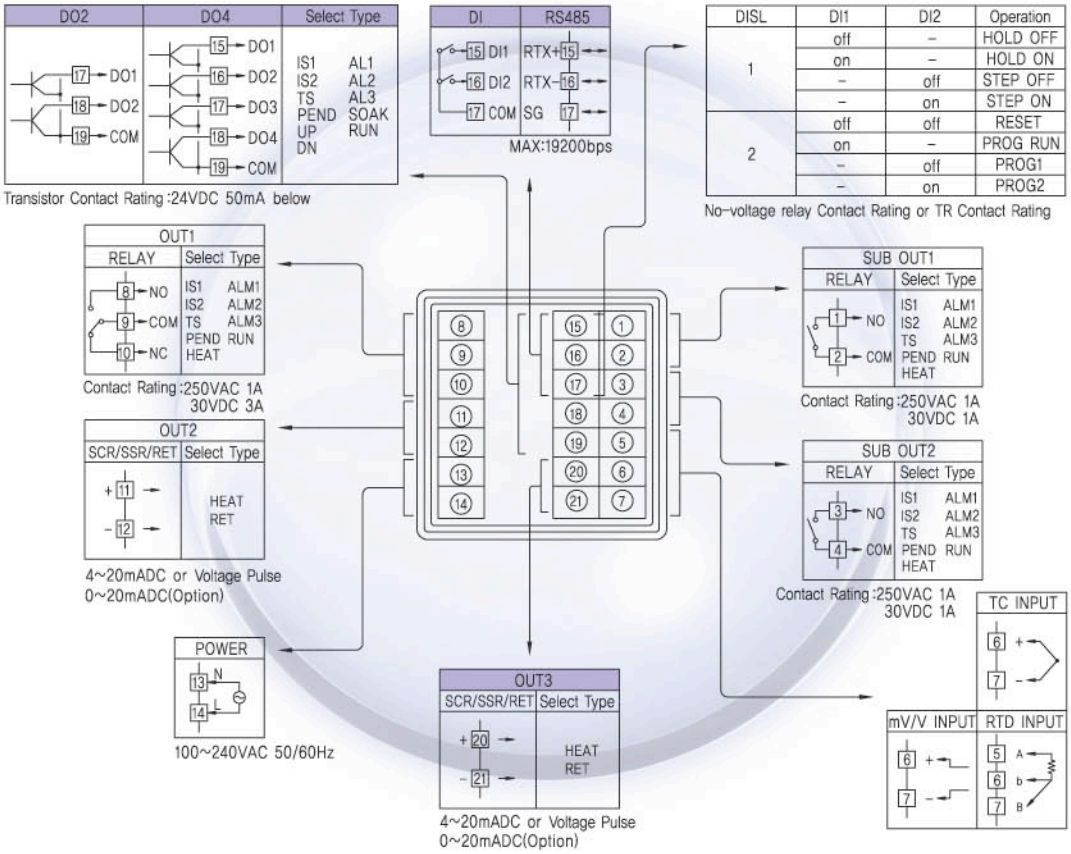

NOVA
SP SERIES
SP580

Programmable controller SP580

- Rretransmission Output, 1Alarm Output
- RUN/STOP Function in the external Input contact point
- Display of Running status in Auxiliary Output
- Large Program Capacity : 2 Patterns / 30 Segments
- Variety of Auxiliary Output available (ex IS, TS, PEND etc)
- Input Piece Bias Function (Max 4 zones)
- Automatic PID Parameter Calculation(AT Gain)
- Variety of communication Protocols
- Reliable quality (CE, CUL, ISO, IP65 applied)

Special Features

- A/D Convert : 18bit
- High Accuracy (±0.1%) with excellent Function
- Multi Input : TC, RTD, DCV
- Simultaneous and Multi output available in Max 5 Points
- Easy parameter and program pattern setting
- Function to protect Over-Shoot (Fuzzy)

Operating Display

▶ Display of the status in Stop running

▶ Display of the value of PV and Control Output

▶ Display of Stop Program Run

▶ Current Run Seg shift for Next Seg : "STEP=ON"

▶ Program Run is to Hold "HOLD=ON"

Terminal Assignment

: Options

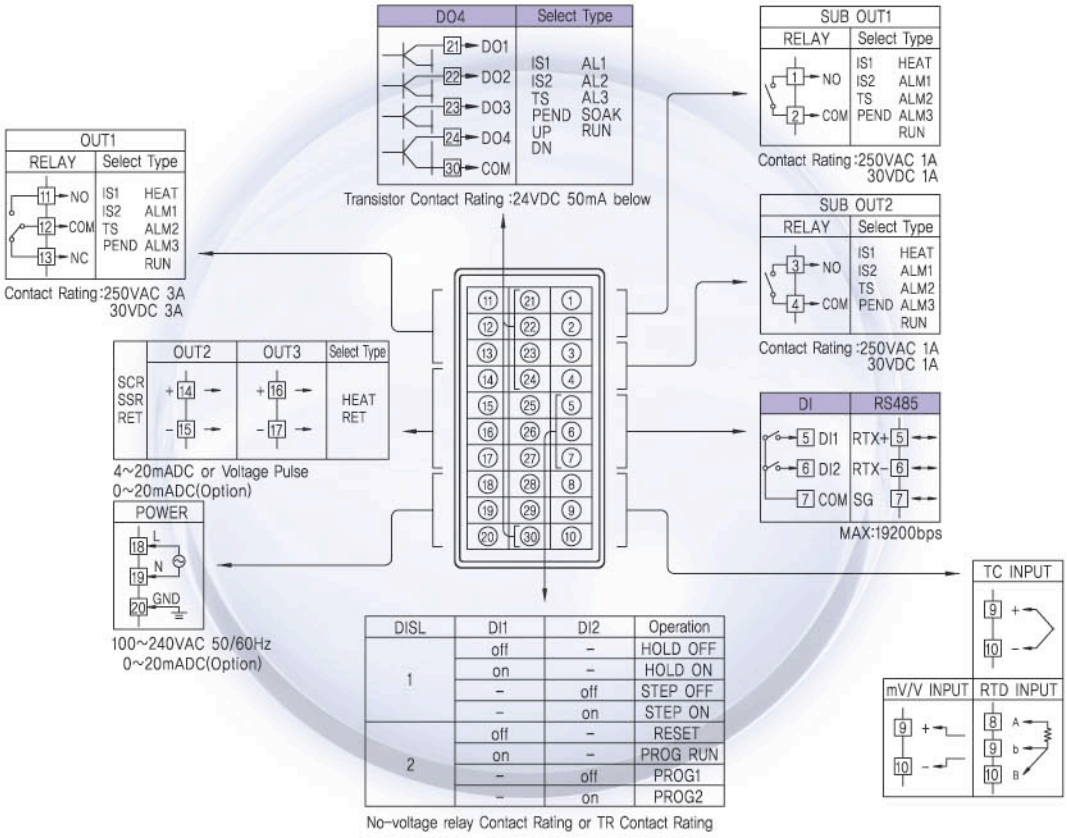

NOVA
SP SERIES
SP590

Special Features

- A/D Convert : 18bit
- High Accuracy (±0.1%) with excellent Function
- Multi Input : TC, RTD, DCV
- Simultaneous and Multi output available in Max 5 Points
- Easy parameter and program pattern setting
- Function to protect Over-Shoot (Fuzzy)

Programmable controller SP590

- Rretransmission Output, 1Alarm Output
- RUN/STOP Function in the external Input contact point
- Display of Running status in Auxiliary Output
- Large Program Capacity : 2 Patterns / 30 Segments
- Variety of Auxiliary Output available (ex IS, TS, PEND etc)
- Input Piece Bias Function (Max 4 zones)
- Automatic PID Parameter Calculation(AT Gain)
- Variety of communication Protocols
- Reliable quality (CE, CUL, ISO, IP55 applied)

Operating Display

▶ Display of the status in Stop running

▶ Display of the value of PV and Control Output

▶ Display of Stop Program Run

▶ Current Run Seg shift for Next Seg "STEP=ON"

▶ Program Run is to Hold "HOLD=ON"

Terminal Assignment

: Options

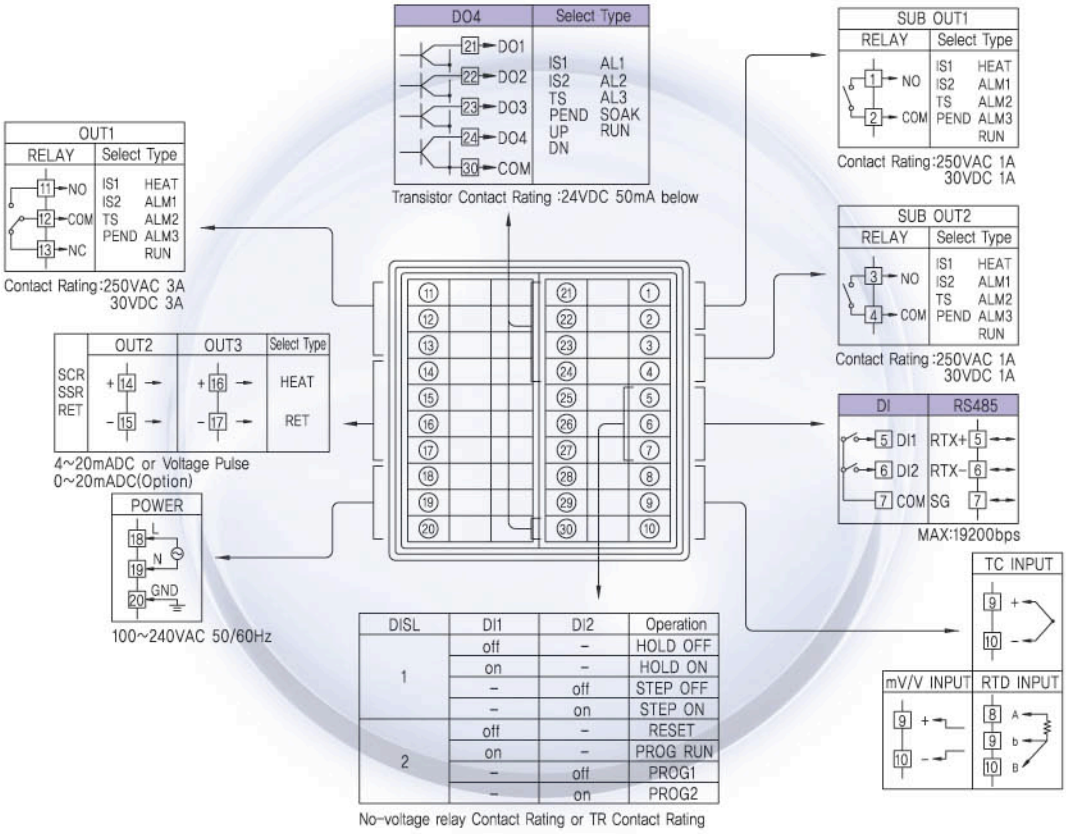

NOVA
SP SERIES
SP790

Special Features

- A/D Convert : 18bit
- High Accuracy(±0.1%) with excellent Function
- Multi Input : TC, RTD, DCV
- Output : SCR(4 ~ 20mADC, 0 ~ 20mADC), SSR, Relay
- 8 Relay Output, 4 O.C Output
- Variety of Auxiliary Output available(Ex IS, TS, PEND etc)

Programmable controller SP790

- Flow Type Parameter Input(Textual Type)
- Large Program Capacity : 30 Patterns / 300 Segments
- Automatic PID Parameter Calculation
- Function to protect Over-Shoot(Fuzzy)
- Input Piece Bias Function (Max 10 zone)
- Program,Fix, On/off, Heating/Cooling, Auto/Man Function
- Reliable quality (CE, CUL, ISO, IP55 applied)

Operating Display

▶ Fix running

▶ Setup Menu

▶ Pattern Set

▶ DO Set

Terminal Assignment

: Options

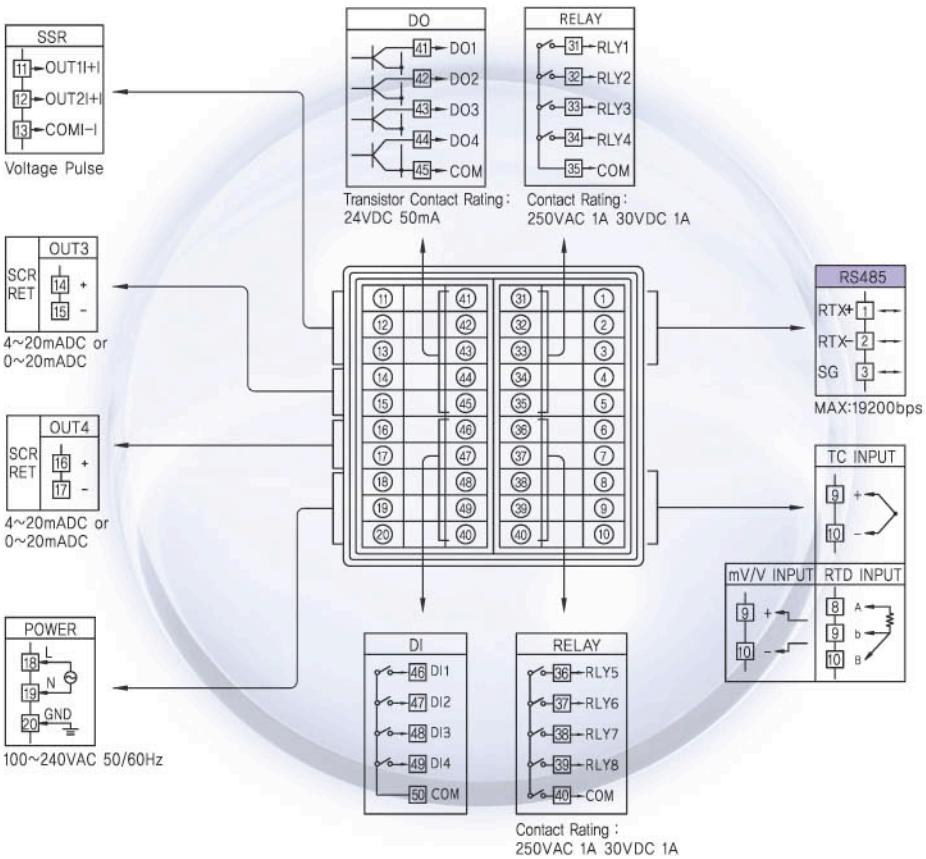

NOVA
SD SERIES
SD560

Special Features

- High Accuracy (±0.1%)
- Multi Input : TC, RTD, DCV
- ALARM Output Max 3 Points

Digital indicator SD560

- Easy parameter and value setting
- Reset function by the external Input contact point
- Memory and Display Function of High and Low temperature value
- Standard Option of Retransmission and Alarm output 1 Point
- Variety of communication Protocols
- Reliable quality (CE, CUL, ISO, IP65 applied)

Operating Display

▶ Display Input Value

▶ Display Value of Maximum Measuring

▶ Display Value of Minimum Measured

Terminal Assignment

: Options

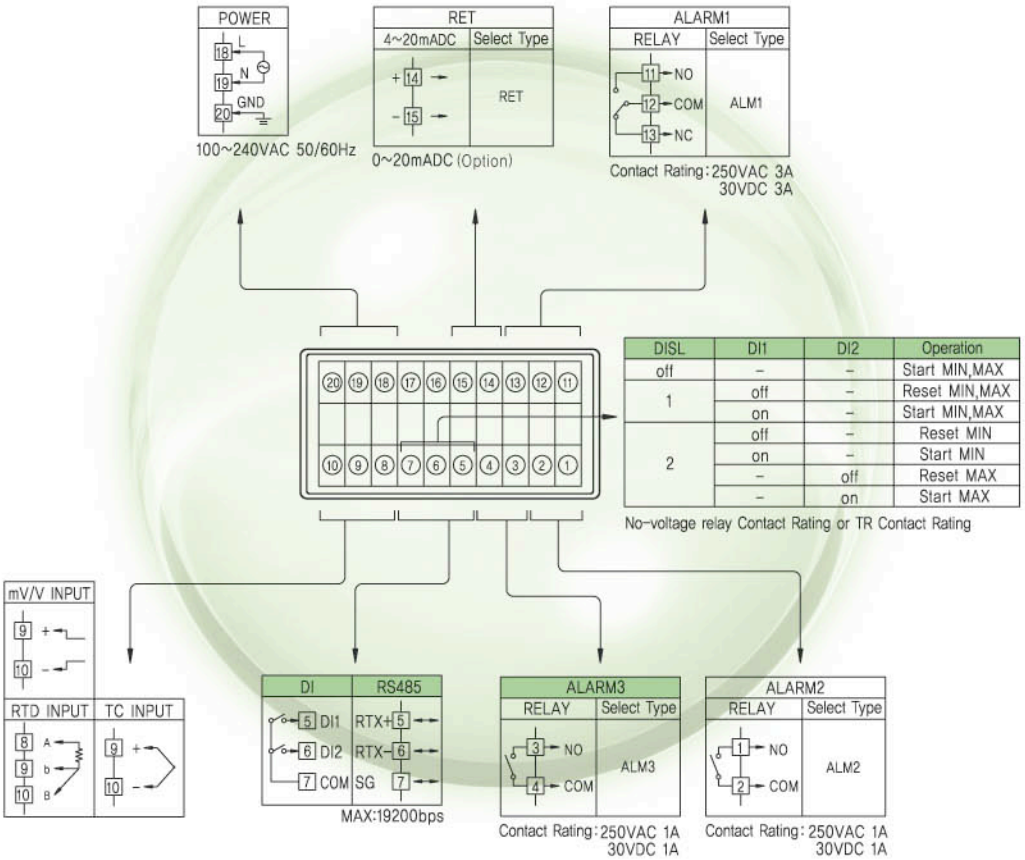

NOVA
SD SERIES
SD590

Digital indicator SD590

- Easy parameter and value setting
- Reset function by the external Input contact point
- Memory and Display Function of High and Low temperature value
- Standard Option of Retransmission and Alarm output 3 Points
- Variety of communication Protocols
- Reliable quality (CE, CUL, ISO, IP55 applied)

Special Features

- High Accuracy (±0.1%)
- Multi Input : TC, RTD, DCV
- ALARM Output Max 3 Points

Operating Display

▶ Display Input Value

▶ Display Value of Maximum Measuring

▶ Display Value of Minimum Measured

Terminal Assignment

: Options

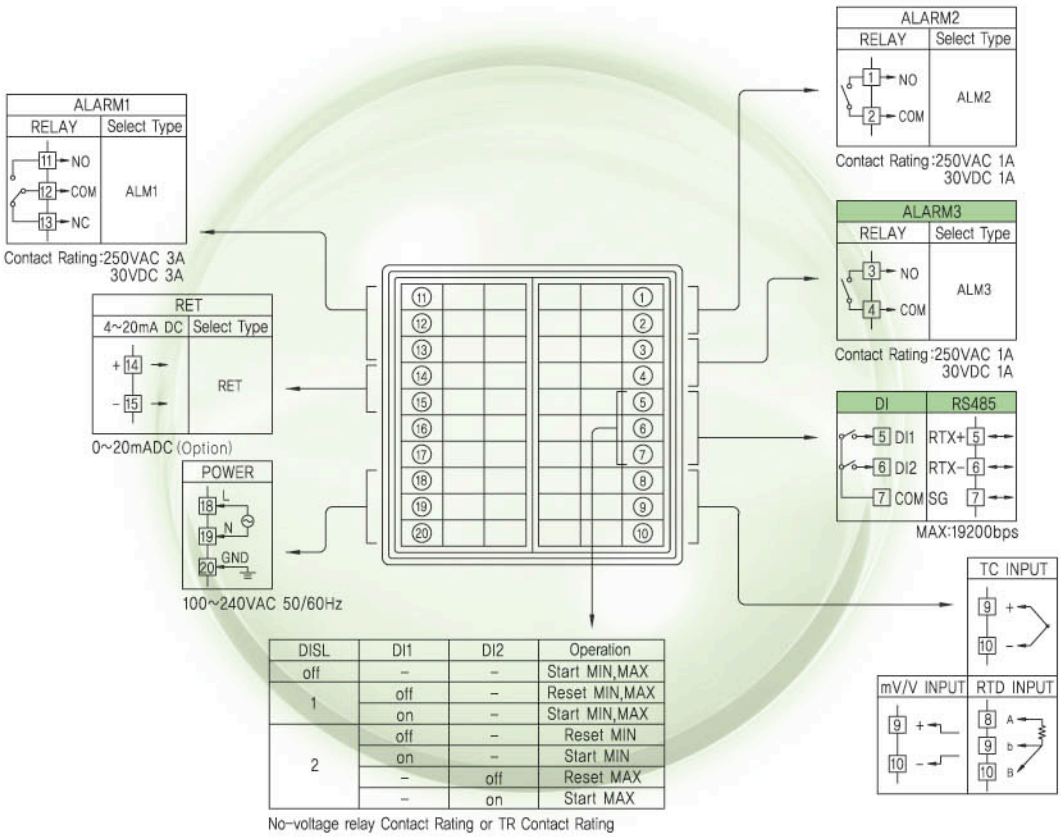

DISL	DI1	DI2	Operation
off	–	–	Start MIN,MAX
1	off	–	Reset MIN,MAX
	on	–	Start MIN,MAX
2	off	–	Reset MIN
	on	–	Start MIN
	–	off	Reset MAX
	–	on	Start MAX

No-voltage relay Contact Rating or TR Contact Rating

NOVA
SL SERIES
SL540

Limit controller SL540

- Reset RELAY after confirmed by user when Over Temperature occur
- Memory and Display Function of High and Low temperature value
- Memory and display function of time period from the power off to the reset
- Variety of communication Protocols
- Reliable quality (CE, CUL, ISO, IP65 applied)
- Standard Alarm

Special Features

- High Accuracy (±0.1%)
- Multi Input : TC, RTD, DCV
- ALARM Output Max 1 Point
- Easy parameter and value setting

Operating Display

▶ Display status of PV,SP

▶ Display status of On,Off Output

▶ Display Time the overtemp occured

▶ Display maximum value of measuring

▶ Display minimum value of measuring

Terminal Assignment

: Options

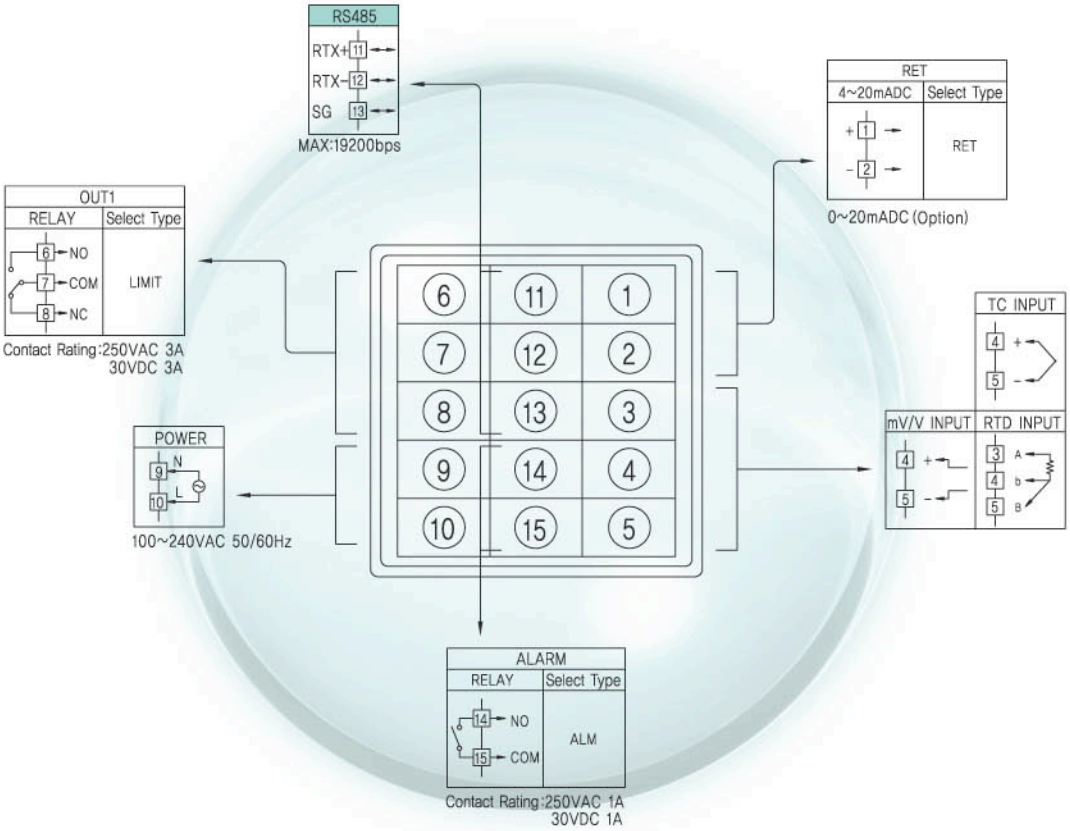

NOVA
SL SERIES
SL590

Limit controller SL590

- Reset RELAY after confirmed by user when Over Temperature occur
- Memory and Display Function of High and Low temperature value
- Memory and display function of time period from the power off to the reset
- Variety of communication Protocols
- Reliable quality (CE, CUL, ISO, IP55 applied)
- Standard Alarm

Special Features

- High Accuracey (±0.1%)
- Multi Input : TC, RTD, DCV
- ALARM Output Max 1 Point
- Easy parameter and value setting

Operating Display

▶ Display status of PV,SP

▶ Display status of On,Off Output

▶ Display Time the overtemp occured

▶ Display maximum value of measuring

▶ Display minimum value of measuring

Terminal Assignment

: Options

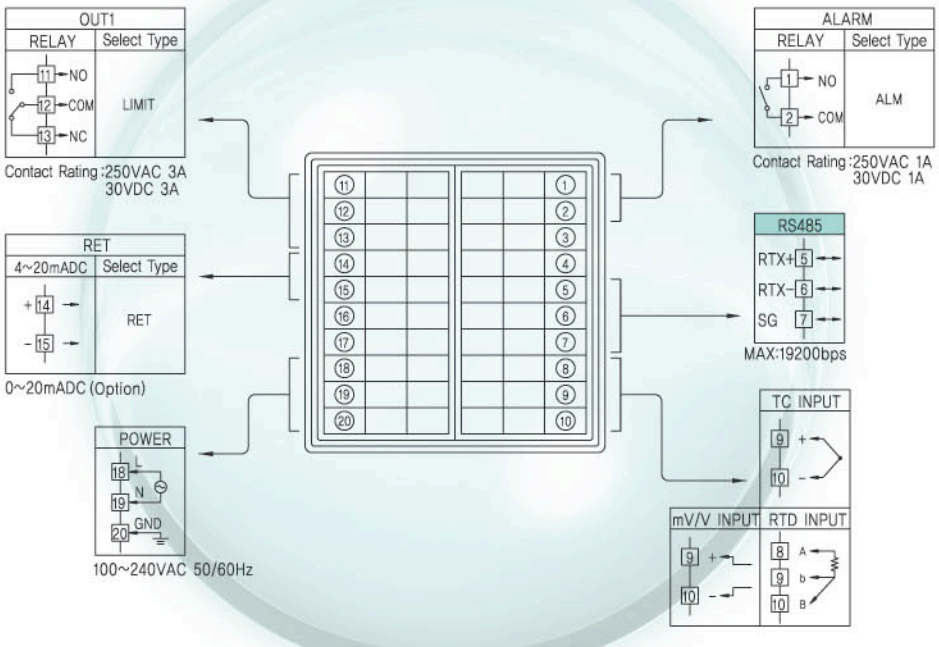

96 × 96 Dimension and Panel Cutting Size

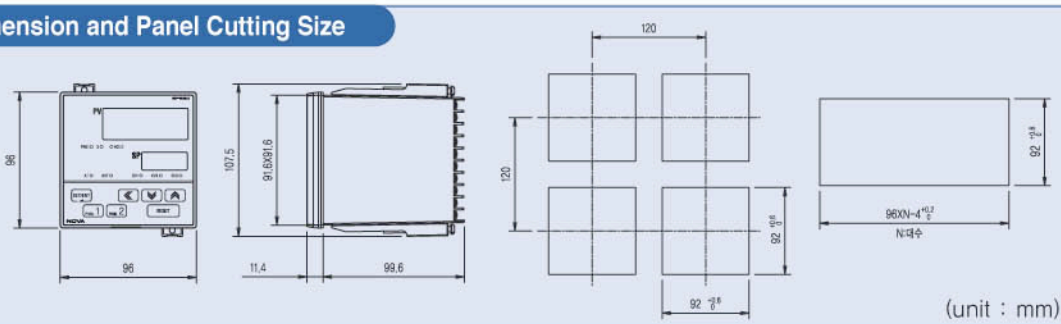

(unit : mm)

48 × 96 Dimension and Panel Cutting Size

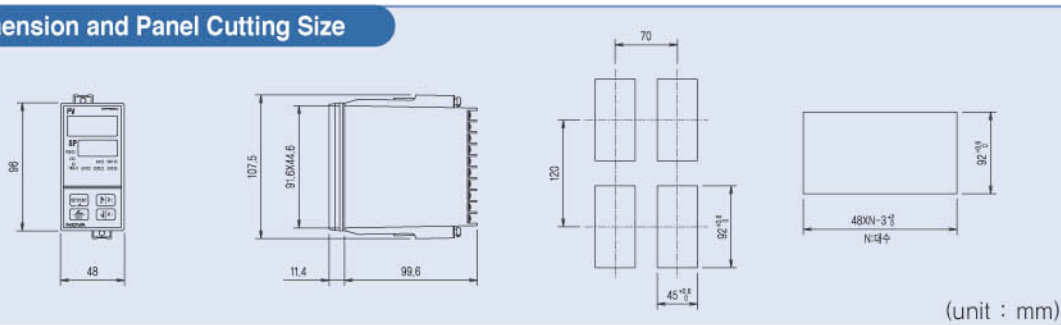

(unit : mm)

48 × 48 Dimension and Panel Cutting Size

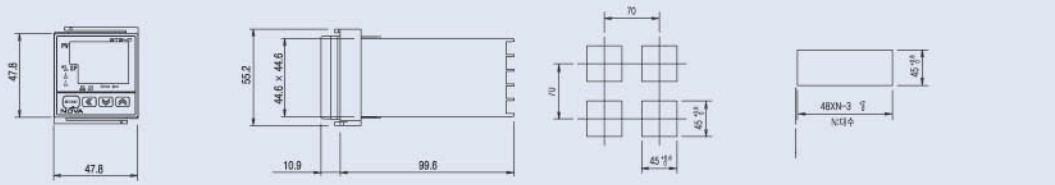

(unit : mm)

72 × 72 Dimension and Panel Cutting Size

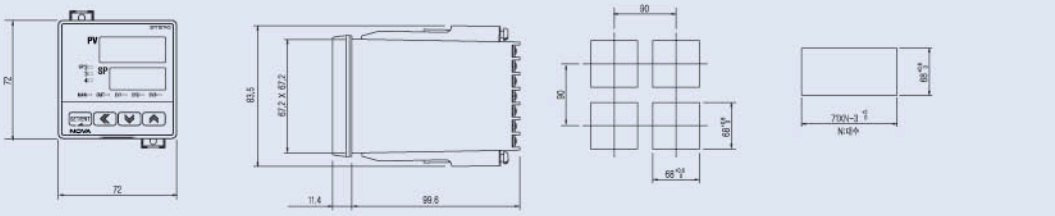

(unit : mm)

96 × 48 Dimension and Panel Cutting Size

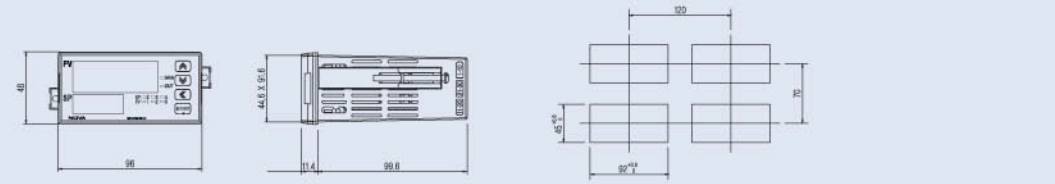

(unit : mm)

WWW.SAMWONTECH.COM

Buchon Techno-park 202-703, #192, Yakdae-Dong, Wonmi-Ku, Buchon-City, Kyunggi-Do, Korea. 430-733
Tel : 82-32-326-9120 Fax : 82-32-326-9119 www.samwontech.com E-mail : webmaster@samwontech.com